Gear pump units

Product series MKx

For oil and fluid grease
For use in SKF MonoFlex single-line systems and centralized oil+air lubrication systems

The units in the MKx product series are used in SKF MonoFlex single-line systems and include a pre-installed pressure regulating valve and pressure relief valve.

The units in the MKx product series can be supplied with an optional pressure gauge for visual monitoring of pressure changes in the main line. Electrical pressure monitoring can be carried out by an integrated pressure switch. Fill level monitoring is also possible if required.

The units are controlled externally via the machine control system or via an integrated control unit. Furthermore, units can be supplied with a pushbutton allowing interim lubrication to be activated manually at any time.

All important functions are integrated into the lid. A plastic cap protects the electrical components from environmental influences such as dirt and dust.

The modular structure of the units of the MKx product series makes them attractive to machine manufacturers as well as to end users and dealers.

CAD models for products shown in this brochure can be downloaded at:
skf-lubrication.partcommunity.com

Important information on product usage
All products from SKF may be used only for their intended purpose as described in this brochure and in any instructions. If operating instructions are supplied with the products, they must be read and followed.

Not all lubricants are suitable for use in centralized lubrication systems. SKF does offer an inspection service to test customer supplied lubricant to determine if it can be used in a centralized system. SKF lubrication systems or their components are not approved for use with gases, liquefied gases, pressurized gases in solution and fluids with a vapor pressure exceeding normal atmospheric pressure (1 013 mbar) by more than 0,5 bar at their maximum permissible temperature.

Hazardous materials of any kind, especially the materials classified as hazardous by European Community Directive EC 67/548/EEC, Article 2, Par. 2, may only be used to fill SKF centralized lubrication systems and components and delivered and/or distributed with the same after consulting with and receiving written approval from SKF.

PUB LS/P2 12133 EN · 1-1203-EN

Contents

Distinguishing features of the gear pump units
Description of the models

Gear pump unit MKU 4
Gear pump unit MKF 4
Gear pump unit MKL 4

System layout **5**

Diagram of the various combination options for the MKU product series **6**

Configurator, product series MKU **7**

Diagram of the various combination options for the MKF product series **8**

Configurator, product series MKF **9**

Diagram of the various combination options for the MKL product series **10**

Configurator, product series MKL **11**

Technical data **12**

Installation drawings **13–14**

Electrical connection / control **15–17**

Types A + B 15
Types C + D with control unit IG/IZ38-30-I 16
Type E with control unit IGZ36-20-S6-I 17
Type F with control unit IG54-20-S4-I 17

Accessories **18–19**

Filling device 18
Main line connection 18
Electrical plug-in connections 19
Topping-up pump 19

Exploded view **20**

Spare parts table **21**

PUB LS/P2 12133 EN · 1-1203-EN

Description of the models

Gear pump unit MKU

Units from the MKU product series are suitable for pumping oil with a viscosity range of 20 to 1 500 mm²/s.

The units are available in the following reservoir designs:

- 2 liter plastic reservoir
- 3 liter plastic reservoir
- 3 liter metal reservoir
- 6 liter plastic reservoir

The units can be fitted with an optional pressure switch and/or fill level switch. Electrical connections are made using DIN built-in connectors or cable fittings.

Units with reservoir capacity of 3 or 6 liters can be supplied with an optional integrated control unit.

Gear pump unit MKF

Units of the MKF product series are suitable for pumping fluid grease of NLGI Grades 000, 00.

The units are available in the following reservoir designs:

- 2 liter plastic reservoir
- 3 liter plastic reservoir
- 6 liter plastic reservoir

The units can be fitted with an optional pressure switch and/or fill level switch. Electrical connections are made using DIN built-in connectors or cable fittings.

Units with reservoir capacity of 3 or 6 liters can be supplied with an optional integrated control unit.

Gear pump unit MKL

Units from the MKL product series are suitable for pumping oil with a viscosity range of 20 to 1 500 mm²/s.

The units are available in the following reservoir designs:

- 3 liter plastic reservoir
- 3 liter metal reservoir
- 6 liter plastic reservoir

The units come fitted with a pressure switch and fill level switch. The signals of these switches are processed by an integrated control unit.

The control unit also provides the option of processing the signals of an external air pressure switch to monitor the oil+air system.

Electrical connections are made using DIN built-in connectors or cable fittings.

PUB LS/P2 12133 EN · 1-1203-EN

SKF MonoFlex system structure

Prelubrication, relubrication, and oil+air distributor system

SKF MonoFlex single-line centralized lubrication systems with single-line distributors generally consist of a lubrication unit, the single-line distributors, and the lubrication lines. The pressure regulating valve and pressure relief valve required for the single-line centralized lubrication system's operation are integrated into the lubrication unit.

If pressure losses of greater than 10 bar are expected in the single-line centralized lubrication system, for example due to a wide expansion of the system or due to the viscosity of the lubricant (depending on the ambient temperature), a pressure switch should be mounted to monitor the system at the end of the main line, if possible. If such a switch is mounted in this location, there is no need for a pressure switch in the unit. The pressure switch monitors the required pressure build-up during the lubrication cycle.

The lubrication unit run time specified by the control unit or machine control system ensures pressure build-up in the single-line centralized lubrication system. Pressure in the main line must be relieved after the lubrication unit is switched off in order to ensure proper functioning of the single-line distributors. This is performed by the pressure relief valve integrated into the lubrication unit.

See the following illustrations for examples of single-line centralized lubrication systems with prelubrication and relubrication distributors.

Prelubrication distributor system

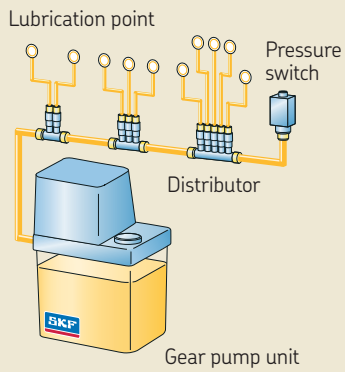

Hydraulic layout 1

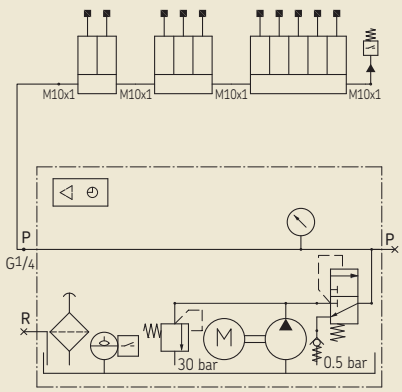

Relubrication distributor system

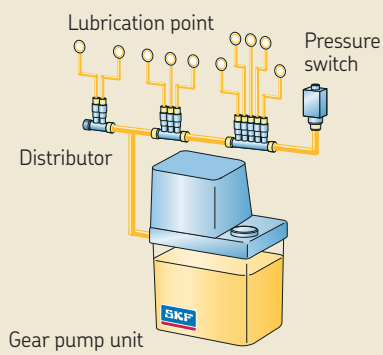

Hydraulic layout 2

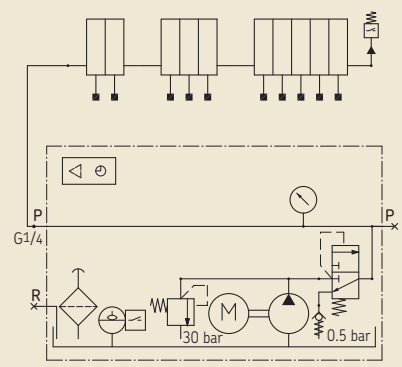

Oil+air system

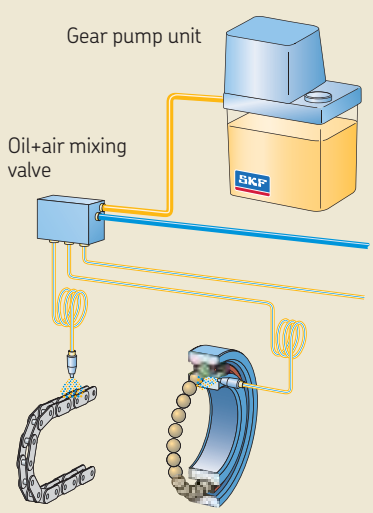

Hydraulic layout 3

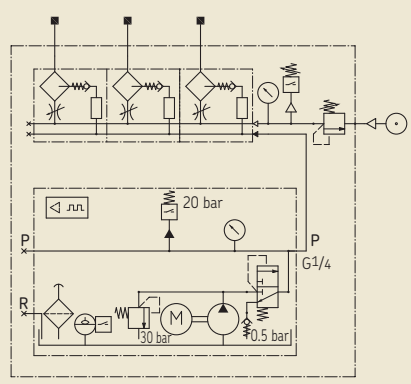

PUB LS/P2 12133 EN · 1-1203-EN

SKF MonoFlex gear pump unit

Diagram of the various combination options for the MKU product series

Connector types

Rectangular connector as per DIN 175301-803A

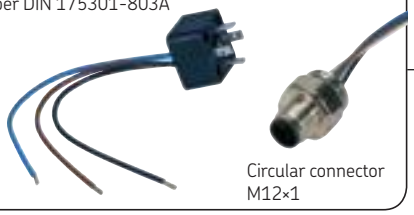

Circular connector M12×1

Cable fittings / plugs

Gear pumps

Delivery rate
0.1 l/min 0.2 l/min 0.5 l/min

Control units

Unit with 2 liter plastic reservoir

Unit with 3 liter plastic reservoir

Unit with 3 liter metal reservoir

Unit with 6 liter plastic reservoir

Pressure gauge

Pressure switch

Fill level switch for min. oil level

Terminal strip

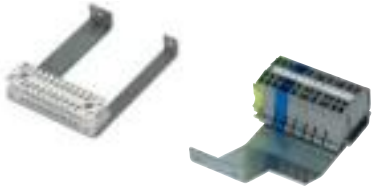

PUB LS/P2 12133 EN · 1-1203-EN

Gear pump unit, product series MKU

Configurator

Order code

M	K	U		–	1						0	0	0	+			

Product series **MK**x

U = oil lubricant

Code number for delivery rate

Selected code number for lubricant reservoir

Selected code letter for control

Selected code letter for monitoring

Selected code number for pressure gauge

Selected code number for electrical connection

Delivery rate

1 = 0.1 l/min	•	•	•	–
2 = 0.2 l/min	–	•	•	•
5 = 0.5 l/min	–	•	•	•

Lubricant reservoir, control

Lubricant reservoir	1 2 liters, plastic	2 3 liters, plastic	3 3 liters, metal	4 6 liters, plastic
Control				
A = no control, with terminal strip	•	•	•	•
B = no control, with terminal strip and pushbutton	•	•	•	•
C = IG38-30-I[1]	–	•	•	•
D = IZ38-30-I[1]	–	•	•	•
E = IGZ36-20-S6-I[1][2]	–	•	•	•

[1] If control **C**, **D**, or **E** is selected, monitoring **C** must be selected.
[2] If control **E** is selected, electrical connection **1** must be selected.

For description of control units, **see page 16–17.**

Monitoring

	X	A	B	C	D	E
Fill level switch						
Without fill level switch	•	•	–	–	–	–
NC contact (detection of wire breakage)	–	–	•	•	–	–
NO contact (no detection of wire breakage)	–	–	–	–	•	•
Pressure switch 20 bar						
Without pressure switch	•	–	•	–	•	–
NO contact	–	•	–	•	–	•

Voltage key

	Voltage	Frequency	Control
924[3]	24 V DC	–	A, B, E
428	230 V AC	50/60 Hz	A, B, C, D, E
429	115 V AC		

[3] Only possible with delivery rates 0.1 und 0.2 l/min

Electrical connection

Control	A, B	A, B				C, D	E
Monitoring	X	A	B	C	D	E	C	C
Electrical connection								
0 = 2 cable fittings	–	•	•	•	•	•	•	–
1 = 1 cable fitting; 1 rectangular connector	–	•	•	•	•	•	•	•
2 = 1 circular connector M12×1; 1 rectangular connector[4]	–	•	•	•	•	•	–	–
3 = 1 sealing plug; 1 cable fitting	•	–	–	–	–	–	–	–
4 = 1 sealing plug; 1 rectangular connector	•	–	–	–	–	–	–	–

[4] Only for design without control.

Pressure gauge

0 = without pressure gauge
1 = with pressure gauge

Order example

MKU1-11AC10000+924

- Gear pump unit for oil
- Delivery rate 0.1 l/min
- 1st generation
- 2 liter plastic reservoir
- No control, with terminal strip
- NC fill level switch, NO pressure switch
- With pressure gauge
- 2 cable fittings
- Voltage 24 V DC

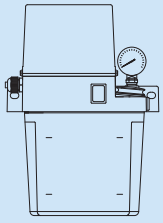

PUB LS/P2 12133 EN · 1-1203-EN

SKF MonoFlex gear pump unit

Diagram of the various combination options for the MKF product series

Connector types

Rectangular connector as per DIN 175301-803A

Circular connector M12×1

Cable fittings / plugs

Gear pumps

Delivery rate
0.1 l/min 0.2 l/min

Control units

Unit with 2 liter plastic reservoir

Unit with 3 liter plastic reservoir

Unit with 6 liter plastic reservoir

Pressure gauge

Pressure switch

Fill level switch for min. fluid grease level

Terminal strip

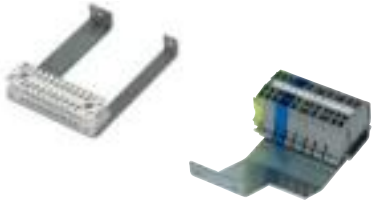

PUB LS/P2 12133 EN · 1-1203-EN

SKF

Gear pump unit, product series MKF

Configurator

Order code

M	K	F		–	1						0	0	0	+			

Product series **MK**x

F = fluid grease lubricant

Code number for delivery rate

Selected code number for lubricant reservoir

Selected code letter for control

Selected code letter for monitoring

Selected code number for pressure gauge

Selected code number for electrical connection

Delivery rate

1 = 0.1 l/min	•	•	–
2 = 0.2 l/min	–	•	•

Lubricant reservoir, control

Lubricant reservoir	1 2 liters, plastic	2 3 liters, plastic	4 6 liters, plastic
Control			
A = no control, with terminal strip	•	•	•
B = no control, with terminal strip and pushbutton	•	•	•
C = IG38-30-I[1]	–	•	•
D = IZ38-30-I[1]	–	•	•
E = IGZ36-20-S6-I[1][2]	–	•	•

[1] If control **C**, **D**, or **E** is selected, monitoring **C** must be selected.
[2] If control **E** is selected, electrical connection **1** must be selected.

For description of control units, **see page 16–17.**

Monitoring

	X	A	B	C
Fill level switch				
Without fill level switch	•	•	–	–
NC contact (detection of wire breakage)	–	–	•	•
NO contact (no detection of wire breakage)	–	–	–	–
Pressure switch 20 bar				
Without pressure switch	•	–	•	–
NO contact	–	•	–	•

Voltage key

	Voltage	Frequency	Control
924	24 V DC	–	A, B, E
428	230 V AC	50/60 Hz	A, B, C, D, E
429	115 V AC		

Electrical connection

Control	A, B	A, B		C, D		E
Monitoring	X	A	B	C	C	C
Electrical connection						
0 = 2 cable fittings	–	•	•	•	•	–
1 = 1 cable fitting; 1 rectangular connector	–	•	•	•	•	•
2 = 1 circular connector M12×1; 1 rectangular connector[4]	–	•	•	•	–	–
3 = 1 sealing plug; 1 cable fitting	•	–	–	–	–	–
4 = 1 sealing plug; 1 rectangular connector	•	–	–	–	–	–

[4] Only for design without control.

Pressure gauge

0 = without pressure gauge
1 = with pressure gauge

Order example

MKF1-11AC10000+924

- Gear pump unit for fluid grease
- Delivery rate 0.1 l/min
- 1st generation
- 2 liter plastic reservoir
- No control, with terminal strip
- NC fill level switch, NO pressure switch
- With pressure gauge
- 2 cable fittings
- Voltage 24 V DC

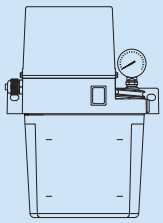

PUB LS/P2 12133 EN · 1-1203-EN

SKF MonoFlex gear pump unit

Diagram of the various combination options for the MKL product series

Connector type

rectangular connector as per DIN 175301-803A

Cable fittings

Gear pumps

Delivery rate
0.1 l/min 0.2 l/min 0.5 l/min

Control

Unit with 3 liter plastic reservoir

Unit with 3 liter metal reservoir

Unit with 6 liter plastic reservoir

Pressure gauge

Pressure switch

Fill level switch for min. oil level

PUB LS/P2 12133 EN · 1-1203-EN

Gear pump unit, product series MKL

Configurator

Order code

M	K	L		–	1		F	C		1	0	0	0	+			

Product series **MK**x

L = oil+air

Code number for delivery rate

Code number for lubricant reservoir

Code letter for control

Code letter for monitoring

Selected code number for pressure gauge

Code number for electrical connection

Delivery rate

1 = 0.1 l/min	•	•	–
2 = 0.2 l/min	•	•	•
5 = 0.5 l/min	•	•	•

Lubricant reservoir, control, monitoring, pressure gauge, electrical connection

Lubricant reservoir	**2**	**3**	**4**
	3 liters, plastic	3 liters, metal	6 liters, plastic

F = control unit IG54-20-S4-I[1)]

C = monitoring with fill level switch (NC contact) and pressure switch 20 bar (NO contact)

Pressure gauge
- **0** = without pressure gauge
- **1** = with pressure gauge

Electrical connection
- **1** = 1 cable fitting; 1 rectangular connector

[1)] For description of the control unit, **see page 17.**

Voltage key

	Voltage	Frequency
924[2)]	24 V DC	–
428	230 V AC	50/60 Hz
429	115 V AC	

[2)] Only possible with delivery rates 0.1 und 0.2 l/min

Bestellbeispiel

MKL2-12FC11000+428

- Gear pump unit for oil+air
- Delivery rate 0.2 l/min
- 1st generation
- 3 liter plastic reservoir
- With control
- NC fill level switch, NO pressure switch
- With pressure gauge
- 1 cable fitting; 1 rectangular connector
- Voltage 230 V AC

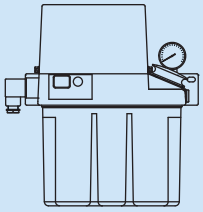

PUB LS/P2 12133 EN · 1-1203-EN

SKF MonoFlex gear pump unit

Technical Data

Reservoir capacity	2, 3, and 6 liters	
Dry weight		
Unit with 2 liter plastic reservoir	3.4 kg	
Unit with 3 liter plastic reservoir	4.2 kg	
Unit with 3 liter metal reservoir	5 kg	
Unit with 6 liter plastic reservoir	5.6 kg	
Delivery rate[1]		
MKU, MKL	0.1; 0.2; 0.5 l/min	
MKF	0.1; 0.2 l/min	
Max. operating pressure	30 bar	
Operating temperature	+10 to 40 °C	
Protection class per DIN EN 60529 (VDE 0470-1)	IP 54	
Pumped media		
MKU, MKL	Mineral oil or synthetic oil	
Operating viscosity	20–1 500 mm²/s	
MKF	Fluid grease NLGI Grade 000 or 00	
	Compatible with plastics, NBR elastomers, copper and copper alloysn	
AC motor		
Rated frequency	50 Hz	60 Hz
Rated voltage	115/230 V	115/230 V
Rated current	1,06/0,53 A	1,36/0,68 A
Rated output	60 W	75 W
Duty type as defined by DIN EN 60034-1 VDE 0530-1)[2]	S3, 20% (1.25 to 25 min)	
With integrated temperature switch		
Recommended fuse protection (line protection) according to DIN EN 60898	B 6A	

DC motor	
Rated voltage	24 V DC
Rated current	1,6 A
Starting current	4 A
Rated output	39 W
Duty type as defined by DIN EN 60034-1 (VDE 0530)[2]	S3, 20% (1.25 bis 25 min)
Integrated fuse for motor Cartridge fuse link (5×20 mm) according to DIN EN 60127-2 (VDE 0820-2) standard sheet 3	T2 A[4]
Recommended fuse protection (line protection) according to DIN EN 60898	B 6A or C 4A
Fill level switch for oil (contact opens when level is too low)	
Switched voltage range	10 to 36 V DC/10 to 25 V AC
Switching current (resistive load)[3]	≤0.25 A
Switching capacity (resistive load)	≤3 W/VA
Fill level switch for oil (contact closes when level is too low)	
Switched voltage range	10 to 36 V DC/10 to 25 V AC
Switching current (resistive load)[3]	≤0.25 A
Switching capacity (resistive load)	≤3 W/VA
Fill level switch for fluid grease (contact opens when level is too low)	
Operating voltage range	10 to 36 V DC
Output current (resistive load)[3]	≤0.25 A
Power consumption without output load	< 10 mA (24 V), < 15 mA (36 V)
Short circuit and polarity reversal protection	Yes
Pressure switch (NO contact)	
Rated pressure	20 bar
Switched voltage range	10 to 36 V DC/10 to 25 V AC
Switching current (resistive load)[3]	≤1 A
Switching capacity (resistive load)	≤10 W/VA
Additional input power on units with control unit	
IG38-30 / IZ38-30	4 W
IG54-20 / IGZ36-20	8 W

[1] Based on an operating viscosity of 140 mm²/s (cSt) at a back pressure of p = 5 bar.
[2] Mode S3 (periodic intermitent operation) describes the ratio between the pump cycle and the subsequent down time. The following limit values result from a relative ON-time of 20% and a cycle time of 1,25 to 25 min:
Min. cycle time: 1.25 min×0.2 = **0.25 min.** Pump cycle with subsequent down time of **1 min.**
Max. cycle time: 25 min×0.2 = **5 min.** Pump cycle with subsequent down time of **20 min.**
[3] When switching inductive loads, take suitable measures to protect the contacts.
[4] Minimum short-circuit current of 6A must be ensured.

PUB LS/P2 12133 EN · 1-1203-EN

SKF MonoFlex gear pump unit

Product series MKx

With 2 liter plastic reservoir

Hydraulic layout 4

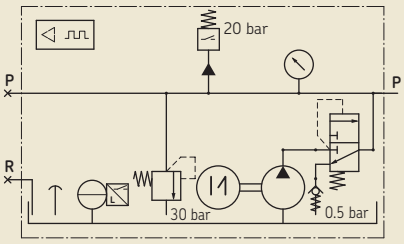

Fig. 1

MKx unit with 2 liter plastic reservoir for oil and fluid grease

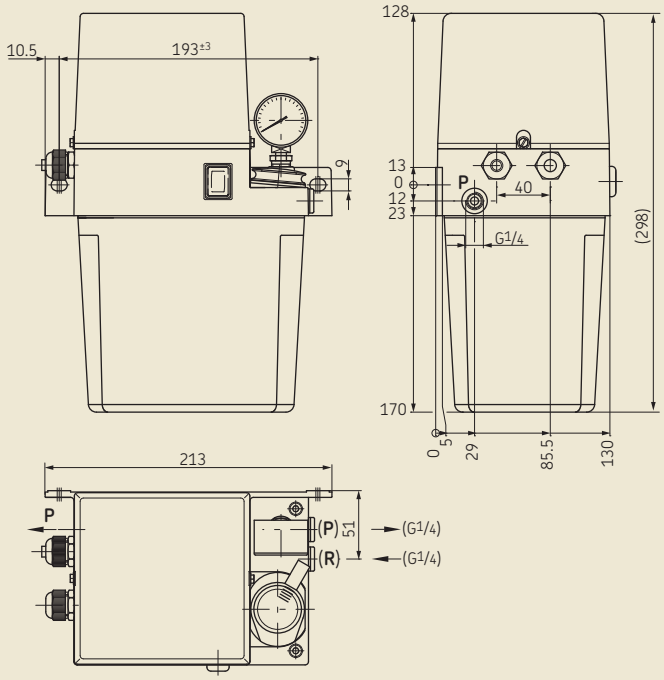

With 3 liter plastic reservoir

Hydraulic layout 5

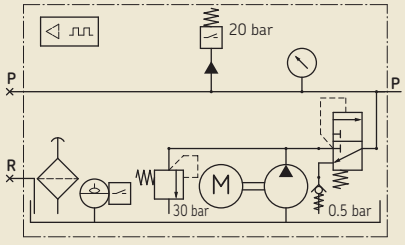

Fig. 2

MKx unit with 3 liter plastic reservoir for oil, fluid grease, and oil+air

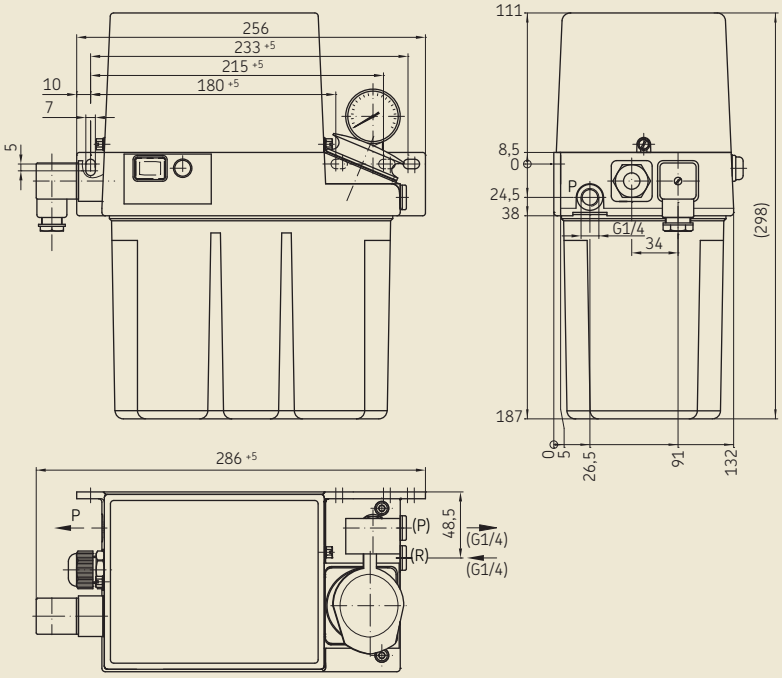

PUB LS/P2 12133 EN · 1-1203-EN

SKF MonoFlex gear pump unit

Product series MKx

With 3 liter metal reservoir

Hydraulic layout 6

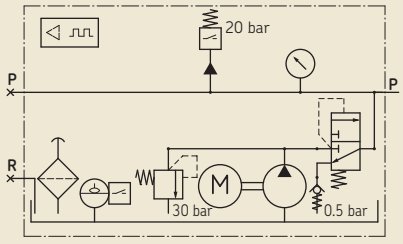

Fig. 3

MKx unit with 3 liter metal reservoir for oil and oil+air

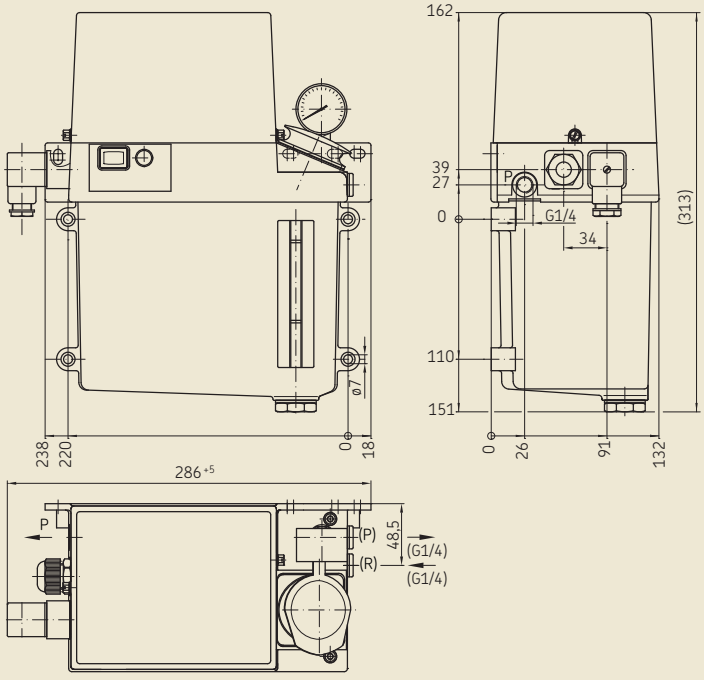

With 6 liter plastic reservoir

Hydraulic layout 7

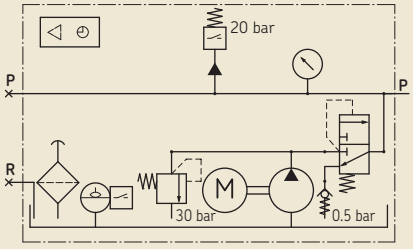

Fig. 4

MKx unit with 6 liter plastic reservoir for oil and fluid grease

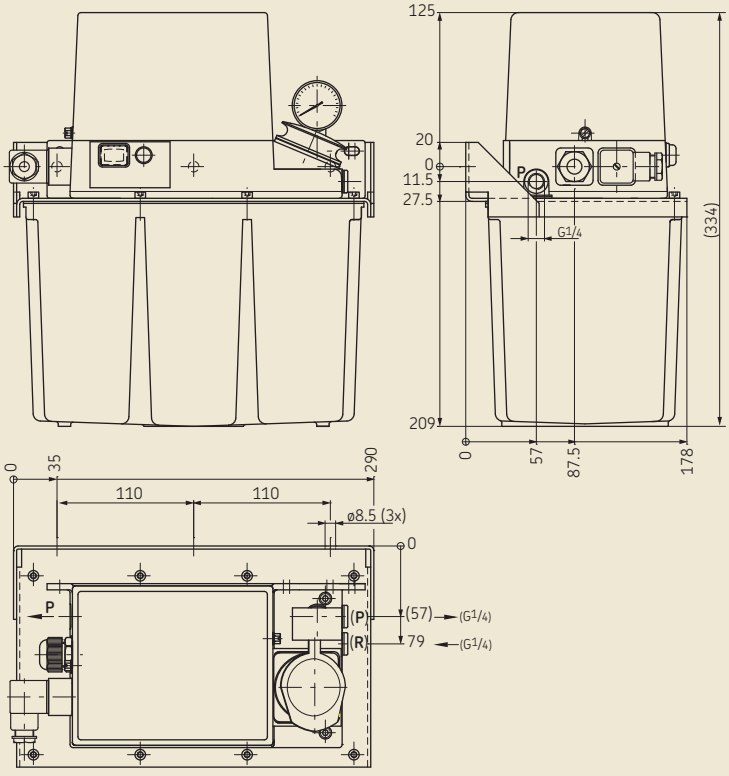

PUB LS/P2 12133 EN · 1-1203-EN

Electrical connection / control

Types A + B with and without monitoring

The pump units of types A + B come equipped with a pressure switch and/or fill level switch, as desired.

The pump units are controlled by the machine control system, which also processes the signals from the monitoring functions (for pressure build-up and lubricant fill level). Electrical connections are made using DIN built-in connectors or cable fittings.

If cable fittings are used, the power cables are connected directly to the terminal strip located under the cover cap, as shown on the applicable terminal diagram.

Key to wiring diagrams 1–7

M	= pump motor
C	= capacitor
L1/S/N	= connection for operating voltage
PE	= protective earth connection
WS	= lubricant level switch
DS	= pressure switch
DK	= pressure switch for interim lubrication
SL	= indicator lamp (green) “Operation”
SL1	= indicator lamp (green) “Operation”
SL2	= indicator lamp (red) “Fault”
XS1	= plug connector as per DIN EN 175301-803 A
XS2	= plug connector M12×1
X1	= terminal strip
MK	= machine contact
DL	= compressed-air circuit-breaker
Y1	= compressed air valve

Wiring diagram 1

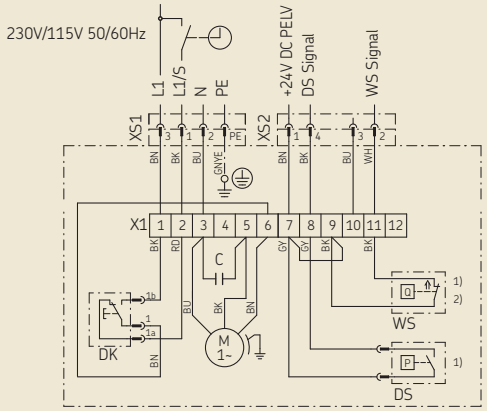

Example: MKU1.. no control, with pushbutton DK, 2 plug connectors, fill level switch opens at min.

1) Optional
2) Optional, contact closes at min. fill level

Wiring diagram 2

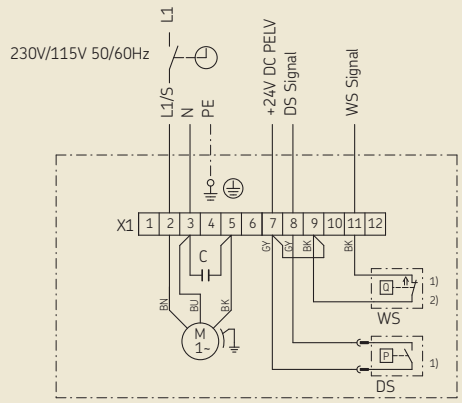

Example: MKU1.. no control, 2 cable fittings, fill level switch opens at min.

1) Optional
2) Optional, contact closes at min. fill level

Wiring diagram 3

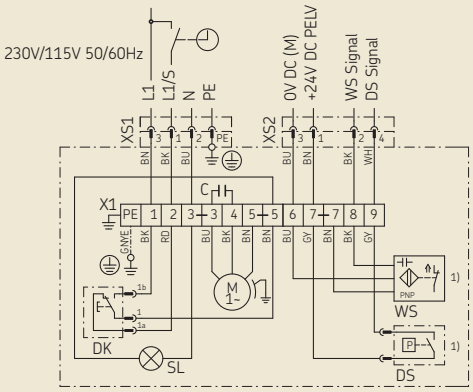

Example: MKF2.. no control, with pushbutton DK, 2 plug connectors, fill level switch opens at min.

1) Optional

Wiring diagram 4

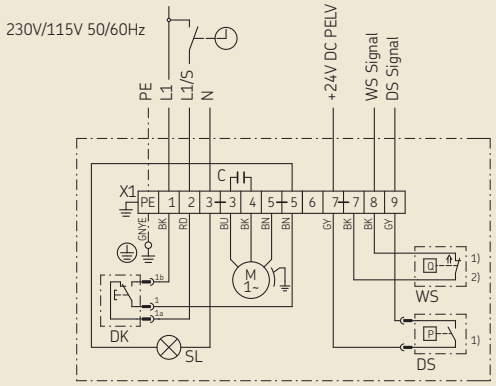

Example: MKU2.. no control, with pushbutton DK, 2 cable fittings, fill level switch opens at min.

1) Optional
2) Optional, contact closes at min. fill level

PUB LS/P2 12133 EN · 1-1203-EN

Electrical connection / control

Types C + D with control unit IG/IZ38-30-I

Description

For control of intermittently operated single-line centralized lubrication systems, the compact pump units with 3 or 6 liter reservoirs can be fitted with an electronic control unit.

Either:

- IG38-30-I, **timer** operation for time-dependent control[1)]
- IZ38-30-I, **counter** operation for load-dependent control[2)]

Functions

- Adjustable interval duration
- Non-adjustable pump dwell time
- Non-adjustable pressure build-up monitoring time
- Pump run time limitation
- Prelubrication (lubrication when the supply voltage is switched on)
- Fill level monitoring with detection of wire breakage (WS switch contact opens when level is too low)
- Operation with 3-wire proximity switch possible

Preset parameters

IG38-30-I

- Interval time 1 minute (for time-dependent control)
- Monitoring time 60 seconds
- Pump dwell time 15 seconds

IZ38-30-I

- Interval time 1 pulse (for load-dependent control)
- Monitoring time 60 seconds
- Pump dwell time 15 seconds

Fig. 5

Wiring diagram 5

Terminal diagram IG/IZ38-30-I

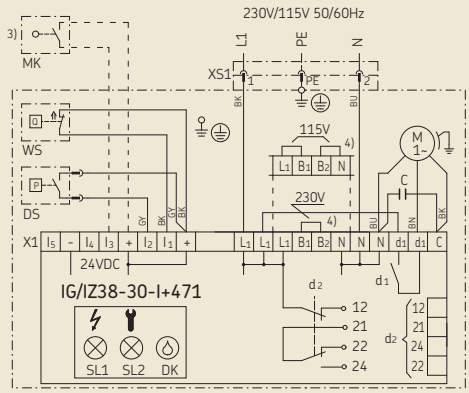

3) Machine contact MK only required with counter operation (IZ38-30-I).
4) Control unit can be set to either 230 V AC or 115 V AC. The pump motor's voltage setting cannot be changed.

d2: 12 malfunction
d2: 24 normal operation
d2: 22 malfunction

Lubrication interval duration
1) In minutes
2) In number of pulses of the external machine contact MK

PUB LS/P2 12133 EN · 1-1203-EN

Electrical connection / control

Type E with control unit IGZ36-20-S6-I

Modes of operation

The control unit IGZ36-20-S6-I can be utilized as a pulse generator[1] or pulse counter[2].

Functions

- Adjustable interval duration
- Adjustable pump dwell time
- Adjustable pressure build-up monitoring time
- Pump run time limitation
- Prelubrication (lubrication when the supply voltage is switched on)
- Fill level monitoring with detection of wire breakage (WS switch contact opens when level is too low)
- Operation with 3-wire proximity switch possible

Preset parameters

- Mode of operation B (time-dependent control)
- Interval time 10 minutes
- Monitoring time 60 seconds
- Pump dwell time 15 seconds

Fig. 6

Wiring diagram 6

Terminal diagram IGZ36-20-S6-I

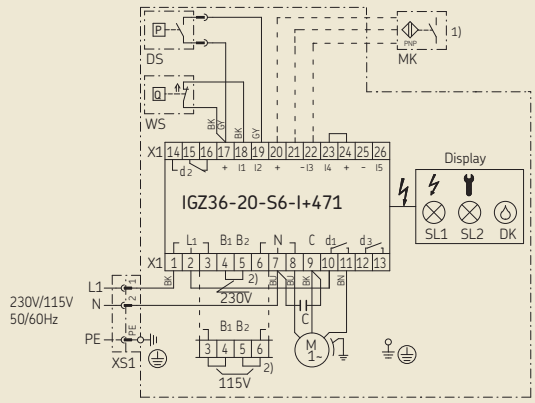

1) Machine contact MK only required with counter operation (mode of operation D).
2) Control unit can be set to either 230 V AC or 115 V AC. The pump motor's voltage setting cannot be changed.

X1: 16 malfunction
X1: 14 normal operation

Type F with control unit IG54-20-S4-I

Modes of operation

The control unit IG54-20-S4 can only be utilized as a pulse generator[1].

Functions

- Adjustable interval time
- Adjustable number of prelubrication cycles
- Adjustable pump dwell time
- Non-adjustable monitoring time for oil pressure build-up
- Pump run time limitation
- Compressed air monitoring
- Non-volatile memory (EEPROM) for operation without prelubrication cycles
- Fill level monitoring (NC contact)
- Additional output d3 for compressed-air valve Y1

Preset parameters

- Mode of operation B (time-dependent control)
- Interval time 10 minutes
- Monitoring time 60 seconds
- Pump dwell time 5 seconds
- Number of prelubrication cycles 10

Wiring diagram 7

Terminal diagram IG54-20-S4-I

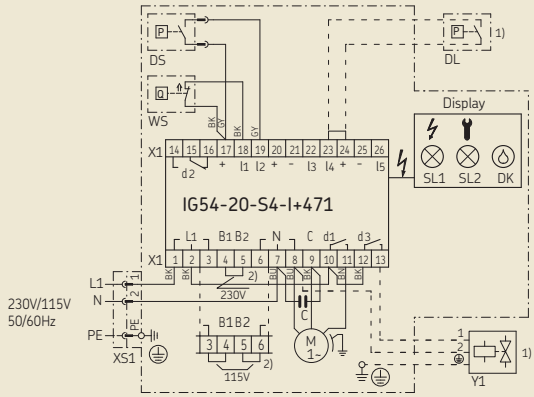

1) Can be connected by the customer: compressed air switch DL / compressed air valve Y1.
2) Control unit can be set to either 230 V AC or 115 V AC. The pump motor's voltage setting cannot be changed.

X1: 16 malfunction
X1: 14 normal operation

Lubrication interval duration
1) In minutes
2) In number of pulses of the external machine contact MK

PUB LS/P2 12133 EN · 1-1203-EN

Accessories

Filling device

Fig. 7

Filling device complete with banjo fitting

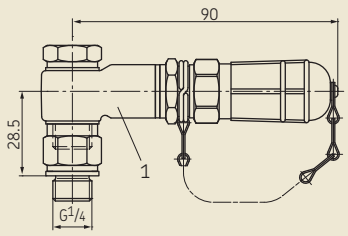

Filling device

Item	Description	Order No.
1	Filling device, complete with banjo fitting (Fig. 7)	**995-000-800**
2	Coupling socket (for topping-up connection)	**995-001-500**
3	Sealing ring	**DIN 7603-A14x18-CU**
4	Hose socket for connection to coupling socket	
	d ø13	**857-760-007**
	d ø16	**857-870-002**

Fig. 8

Filling device with quick-action coupling

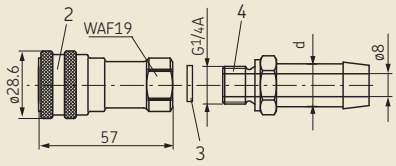

Main line connections

Fig. 9

For plastic tubing

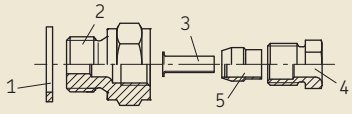

For plastic and steel tubing

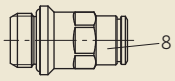

For steel tubing

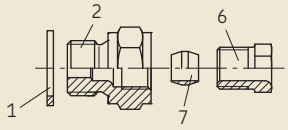

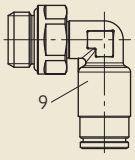

Main line connections for pipe ø6

Item	Description	Order No.
1	Sealing ring	**508-108**
2	Adapter	**406-054**
3	Reinforcing socket	**406-603**
4	Socket union	**406-612**
5	Tapered sleeve	**406-611**
6	Socket union	**406-002**
7	Double tapered ring	**406-001**
8	Plug connector, straight	**406-054-VS**
9	Plug connector, pivoted	**506-143-VS**

See also brochure fittings and accessories 1-0103-EN

PUB LS/P2 12133 EN · 1-1203-EN

Accessories

Electrical plug-in connections

Fig. 10

Cable socket
DIN EN 175301-803A

Cable socket
M12×1

A B C D E

Electrical plug-in connections

Fig.	Description	Order No.
A	Cable socket, cable diameters 6 - 9 mm	**179-990-034**
A	Cable socket, cable diameters 4,5 - 7 mm	**179-990-147**
B	Cable socket M12×1, straight	**179-990-371**
C	Cable socket M12×1, straight, with molded cable (5 m, 4×0.25 mm²)	**179-990-600**
D	Cable socket M12×1, angled	**179-990-372**
E	Cable socket M12×1, angled, with molded cable (5 m, 4×0.25 mm²)	**179-990-601**

See also brochure electrical plug-in connections 1-1730-EN

Topping-up pump for fluid grease

Fig. 11

Topping-up pump

Description	Order No.
With truck	
For 25 kg drum	**169-000-042**
For 50 kg drum	**169-000-054**
Without truck	
For 25 kg drum	**169-000-342**
Matching filler socket	**995-000-705**

Delivery rate. . . . . ~40 cm³/stroke

PUB LS/P2 12133 EN · 1-1203-EN

Exploded drawing

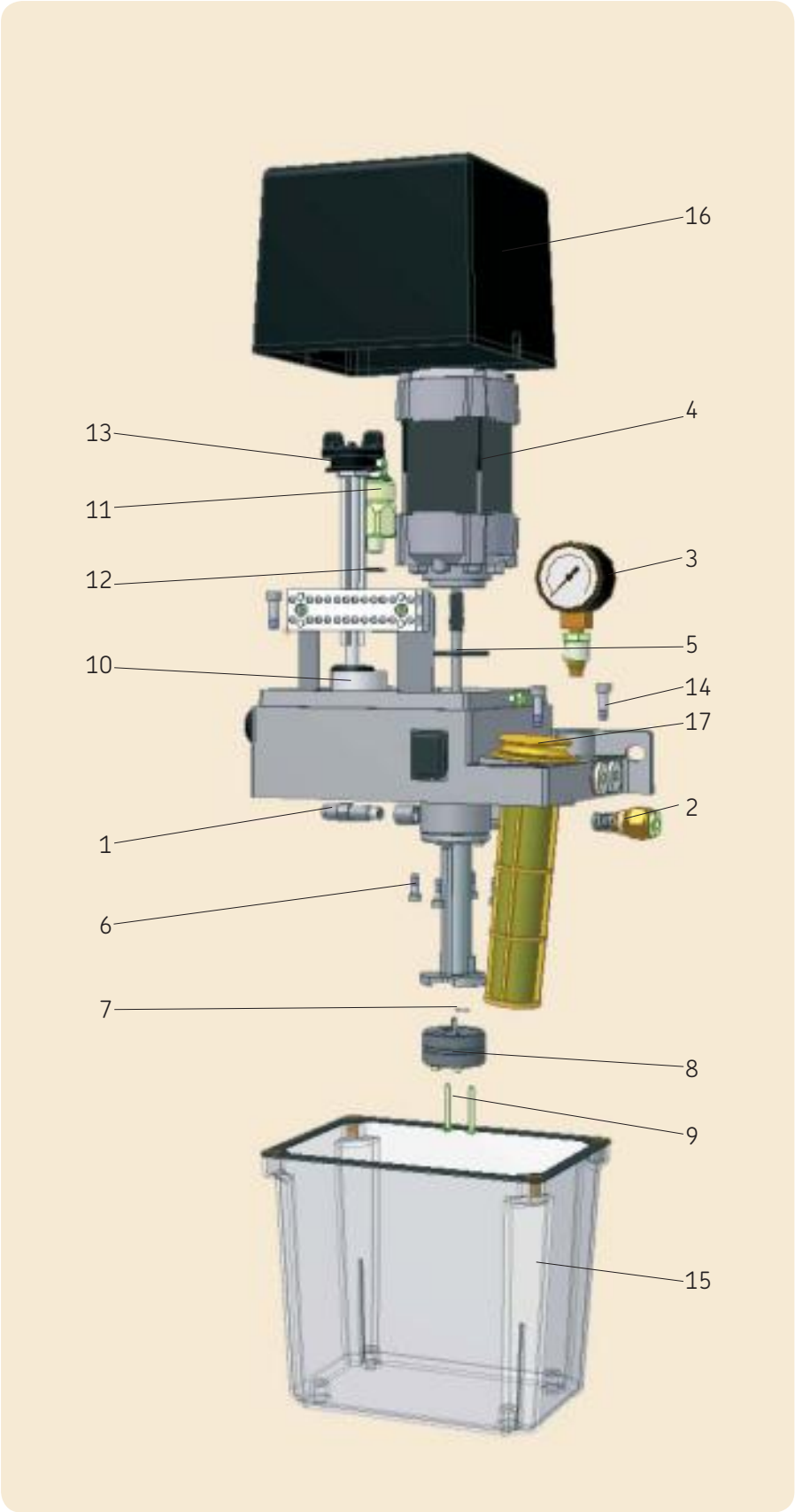

Only original spare parts from SKF Lubrication Systems Germany AG may be used.

Unauthorized alterations to products and the use of non-original spare parts and accessories are not permitted.

Dismantling of the product or individual parts within the statutory warranty period is not permitted and voids any claims.

Repair work must be performed only by the Service department of SKF Lubrication Systems Germany AG. For inquiries concerning assembly or maintenance, contact SKF Lubrication Systems Germany AG or an authorized SKF dealer or Service Partner.

PUB LS/P2 12133 EN · 1-1203-EN

Spare parts table

Item	Units	Material number	Description	Description
1	1	**996-000-947**	Pressure regulating valve 32 bar	For oil
	1	**996-002-197**	Pressure regulating valve 30 bar	For fluid grease
2	1	**MKF.U012**	Pressure relief, compl., for fluid grease	For fluid grease
	1	**MKU.U012**	Pressure relief, compl., for oil	For oil
3	1	**MKF.U013**	Pressure gauge for fluid grease	For fluid grease (without throttle)
	1	**MKU.U013**	Pressure gauge for oil	For oil (with throttle)
4	1	**MKF1.U5+924**	Motor with shaft	24 V DC for 2 and 3 liter fluid grease units
	1	**MKF2.U1+XXX[1)]**	Motor with shaft	for 2 and 3 liter fluid grease units
	1	**MKF2.U2+XXX[1)]**	Motor with shaft	for 6 liter fluid grease units
	1	**MKF2.U5+924**	Motor with shaft	24 V DC for 6 liter fluid grease units
	1	**MKU1.U5+924**	Motor with shaft	24 V DC for 2 and 3 liter oil units
	1	**MKU2.U2+XXX[1)]**	Motor with shaft	for 2 and 3 liter oil units
	1	**MKU2.U3+XXX[1)]**	Motor with shaft	for 6 liter oil units
	1	**MKU2.U5+924**	Motor with shaft	24 V DC for 6 liter oil units
5	1	**WVN501-32.2x3**	O-ring	Seal between motor and lid
6	4	**911-204-122**	Cheese-head screw	Motor fastening
7	1	**WVN501-5.28x1.78**	O-ring	Seal between pump and flange pipe
8	1	**ZP110-2**	Gear pump	Delivery rate 0.1 l/min.
	1	**ZP120-2**	Gear pump	Delivery rate 0.2 l/min.; 0.1 l/min. at 24 V DC
	1	**ZP150-2**	Gear pump	Delivery rate 0.5 l/min.; 0.2 l/min. at 24 V DC
9	2	**834-240-018**	Screw M3×25 Tx10	Fastening for ZP110-2 and ZP120-2
	2	**834-250-034**	Screw M3×30	Fastening for ZP150-2
10	1	**179-340-090**	Capacitor 4 UF/450 V	Capacitor for 230 V AC (+428)
	1	**179-340-091**	Capacitor 16 UF/220 V	Capacitor for 115 V AC (+429)
11	1	**176-112-020**	Pressure switch 20 bar	NO-contact function
12	1	**WVN501-10.5x1.5**	O-ring	Seal for pressure switch
13	1	**MKF.U016**	Level switch, compl.	For fluid grease in 2 and 3 liter units (NC contact)
	1	**MKF.U116**	Level switch, compl.	For fluid grease in 6 liter units (NC contact)
	1	**MKU.U015**	Fill level switch, compl.	For oil in 2 and 3 liter units (NO contact)
	1	**MKU.U016**	Fill level switch, compl.	For oil in 2 and 3 liter units (NC contact)
	1	**MKU.U115**	Fill level switch, compl.	For oil in 6 liter units (NO contact)
	1	**MKU.U116**	Fill level switch, compl.	For oil in 6 liter units (NC contact)
14	4	**911-205-161**	Cheese-head screw	Reservoir fastening for 2 liter
	6	**911-205-181**	Cheese-head screw Z1	Reservoir fastening for 3 and 6 liter
15	1	**993-000-169**	Reservoir, compl.	2 liter plastic reservoir with seal
	1	**B3.U180**	Reservoir, 3 liter	3 liter metal reservoir with seal
	1	**BK3.U147**	Reservoir, 3 liter	3 liter plastic reservoir with seal
	1	**BK6.U180**	Reservoir, 6 liter	6 liter plastic reservoir with seal
16	1	**898-660-056**	Cap	Cap for 2 liter unit
	1	**898-660-052**	Cap	Cap for 3 and 6 liter units
17	1	**MKU.U009**	Filler socket compl.	for oil (with strainer)
	1	**MKU.U019**	Filler socket compl.	for oil (with strainer), 3 liter lid
	1	**MKF.U009**	Filler socket compl.	for fluid grease (without strainer)
	1	**MKF.U019**	Filler socket compl.	for fluid grease (without strainer), 3 liter lid
18 *	1	**IG38-30-I+XXX[2)]**	Control unit	For time-dependent control (for 3 and 6 liter units only)
	1	**IZ38-30-I+XXX[2)]**	Control unit	For load-dependent control (for 3 and 6 liter units only)
	1	**IGZ36-20-S6-I+XXX[2)]**	Control unit	Pulse generator/pulse counter (for 3 and 6 liter units only)
	1	**IG54-20-S4-I+XXX[2)]**	Control unit	Pulse generator (for MKL units only)
19 *		**179-990-033**	Cable socket	
20 *		**179-990-206**	Fuse	for 24 V DC units

*) Not shown
1) Add the voltage key to the part number when ordering. 230 V AC (+428); 115 V AV (+429)
2) Add the voltage key to the part number when ordering. 230/115 V AC (+471); 24 V DC (+472)

PUB LS/P2 12133 EN · 1-1203-EN

Notes

PUBLS/P2 12133 EN · 1-1203-EN

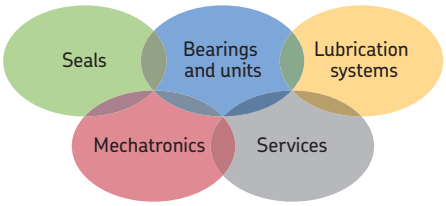

The Power of Knowledge Engineering

Drawing on five areas of competence and application-specific expertise amassed over more than 100 years, SKF brings innovative solutions to OEMs and production facilities in every major industry worldwide. These five competence areas include bearings and units, seals, lubrication systems, mechatronics (combining mechanics and electronics into intelligent systems), and a wide range of services, from 3-D computer modelling to advanced condition monitoring and reliability and asset management systems. A global presence provides SKF customers uniform quality standards and worldwide product availability.

Additional brochures:

1-0103-EN	*Fittings and Accessories*
1-1700-3-EN	*Control Units for Oil+Air Lubrication*
1-1700-4-EN	*Control Units for Single-Line Systems*
1-1730-EN	*Electrical Plug-In Connections*
1-9201-EN	*Transport of Lubricants in Centralized Lubrication Systems*

SKF Lubrication Systems Germany AG
Berlin Plant
Motzener Str. 35/37 · 12277 Berlin
PO Box 970444 · 12704 Berlin
Germany

Tel. +49 (0)30 72002-0
Fax +49 (0)30 72002-111

This brochure was presented to you by:

® SKF is a registered trademark of the SKF Group.

© SKF Group 2014
The contents of this publication are the copyright of the publisher and may not be reproduced (even extracts) unless prior written permission is granted. Every care has been taken to ensure the accuracy of the information contained in this publication, but no liability can be accepted for any loss or damage whether direct, indirect or consequential, arising out of use of the information contained herein.

PUB LS/P2 12133 EN · June 2014 · **1-1203-EN**

This brochure replaces brochure 1-0016-EN.