Gear Pump Units

For single-line centralized lubrication systems

MFE5-KW3-2

MFE5-KW6

MFE5-BW7

These units comprising the MFE Group are designed to supply the lubricant used in intermittently operated, single-line centralized lubrication systems.

The basic setup includes a gear pump unit with motor, a 3 or 6 liter lubricant reservoir, metal or plastic, or a 15 liter metal reservoir and float switch to monitor the minimum permissible level of lubricant.

In addition to the basic models, it is also possible for the units to be outfitted with add-ons.

Special models for a wide variety of applications are listed in the overview table on page 3.

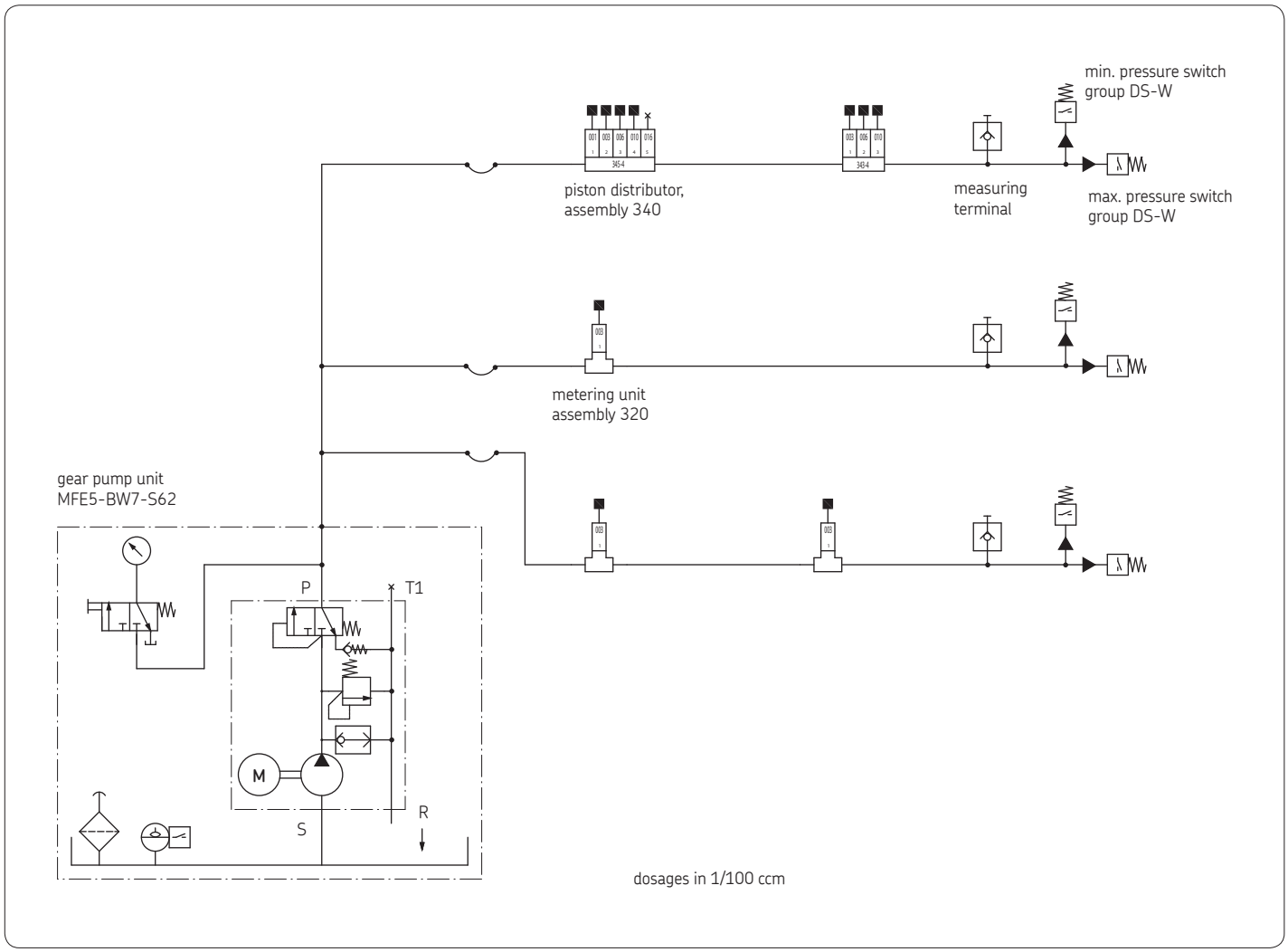

Example of a single-line central lubrication system for an automobile manufacturing plant

The system consists essentially of:
- a gear pump unit
- 6 liter metal reservoir
- piston distributors, assembly 340
- metering units, assembly 320
- pressure switches, group DS-W
  for max. pressure build-up and relief pressure

Overview table for gear pump units

See important product usage information on the back cover.

Order No.	Reservoir capacity [liters]	Reservoir material	Design features
MFE5-KW3-2	3	Plastic	Basic version with WS32-2 float switch
MFE5-KW3-2-S4	3	Plastic	Basic version with WS35-2 float switch
MFE5-KW3-2-S9	3	Plastic	For oil as 5 mm^2/s at max. 16 bars
MFE5-KW3-2-S13	3	Plastic	Unit for 50/95 weatherproofing (DIN 50015); WS32-2 float switch
MFE5-KW3-S24	3	Plastic	Motor with HAN6ES Harting connector; WS35-S30 float switch
MFE5-BW3-2	3	Metal	Basic version with WS32-2 float switch
MFE5-BW3-2-S14	3	Metal	French Automotiv version (CNOMO); WS35-2 float switch; Stäubli filler coupling
MFE5-BW3-2-S22	3	Metal	For oil as 5 mm^2/s at max. 16 bars
MFE5-BW3-2-S34	3	Metal	Motor UL/CSA
MFE5-BW3-2-S37	3	Metal	Basic version with WS35-2 float switch
MFE5-BW3-S41	3	Metal	Motor with HAN6ES Harting connector; WS35-S30 float switch
MFE5-KW6	6	Plastic	Basic version with WS32-2 float switch
MFE5-KW6-S1	6	Plastic	Basic version with WS35-2 float switch
MFE5-KW6-S8	6	Plastic	FKM (FPM) version, WS32-S8 float switch
MFE5-KW6-S33	6	Plastic	Motor with HAN6ES Harting connector; WS35-S30 float switch
MFE5-BW7	6	Metal	Basic version with WS32-2 float switch
MFE5-BW7-CF	6	Metal	Basic version with WS35-2 float switch
MFE5-BW7-S8	6	Metal	FKM (FPM) version, WS32-S8 float switch
MFE5-BW7-S22	6	Metal	Motor UL/CSA
MFE5-BW7-S29	6	Metal	French Automotiv version (CNOMO); WS35-2 float switch; Stäubli filler coupling
MFE5-BW7-S54	6	Metal	Unit for 50/95 weatherproofing (DIN 50015); WS32-2 float switch
MFE5-BW7-S120	6	Metal	VW version
MFE5-BW7-S98	6	Metal	VW version with filler coupling
MFE5-BW7-S107	6	Metal	Motor with HAN6ES Harting connector; WS35-S30 float switch
MFE5-BW15	15	Metal	Basic version with WS32-2 float switch; wall-mounted reservoir
MFE5-BW16	15	Metal	Basic version with WS35-2 float switch; wall-mounted reservoir
MFE5-BW15-S7	15	Metal	Basic version with WS35-2 float switch; foot-mounted reservoir
MFE5-BW16-S93	15	Metal	Motor with HAN6ES Harting connector; WS35-S30 float switch

Explanation of hydraulic function

Both (ME5, MFE5) types have the same hydraulic function.
Oil is sucked in at **S** and flows under pressure through the duct in the direction **P**. The oil pressure closes valve **V** and opens valve **E3**, at the same time closing valve **E1** against spring tension. If air is entrained (due to low oil level in the reservoir), valve **V** remains open and diverts the air or, respectively, the air-oil mixture into the return duct (see bubble (o) marking in direction **R1**). Valve **C** allows oil under overpressure to flow out into the return duct (see cross (+) marking).

When the unit stops (interval time), spring-loaded valve **E1** opens and valve **E3** simultaneously closes. The system pressure at **P** can now be released through valve **E1** – with the exception of a small amount of residual pressure determined by valve **E2**. This pressure release is required for the piston distributors to function correctly.
The pressure relief process is shown in fig. 4.

Explanation of the structural differences

In the case of model **ME5**, the long screw plug **D1** blocks flanged port **R2** of the return duct. The oil returning from valves **V**, **C** and **E1** flows via port **R1** through a tube to the separately mounted oil reservoir (see fig. 1 and 2).

In the case of model **MFE5**, the short screw plug **D2** – unlike **D1** with model **ME5** – leaves flanged port **R2** open. A plug closes off external port **R1**. Flanged port **R2** of the return duct drains directly into the reservoir without any connection threads (see fig. 3 and 4).

MFE5 unit variants *

Order No.	Flow rate [2] [l/min]	Max. back pressure [3] [bars]	Design
MFE5-2000	0.5	28	Basic version, NBR, plastic terminal box
MFE5-3041	0.5	28	Basic version, NBR, metal terminal box
MFE5-2000-D	0.5	28	Installed below oil level, NBR, plastic terminal box
MFE5-3000-D	0.5	28	Installed below oil level, NBR, metal terminal box
MFE5-2008	0.5	28	Basic version, FKM (FPM), plastic terminal box
MFE5-2009	0.25	17.5	For light oil as of 5 mm²/s, NBR
MFE5-2053	0.25	17.5	For light oil as of 5 mm²/s, FKM
MFE5-4000	0.5	28	UL/CSA-approved, NBR
MFE5-5000	0.5	28	CCC-approved, NBR
MFE5-1001	0.5	28	HAN6ES Harting connector, NBR, Motor 180° turned
MFE5-1088	0.5	28	HAN10ES Harting connector, FKM
MFE5-S67	0.5	28	50/95 weatherproofing, NBR, metal terminal box

*) *The geometrical dimensions of the variants can deviate of the one shown in Fig. 5.*

[2]) *Flow rate based on an operating viscosity of 140 mm²/s, at a back pressure of p = 5 bars.*

[3]) *The max. back pressure is equivalent to the actual value of the built-in pressure limiting valve. If the units are operated with a single-phase AC supply, only 60% of the indicated pressure is permissible, i.e. a 16-bar pressure limiting valve should be fitted to the system.*

The appropriate capacitors for a frequency of 50 and 60 Hz are:
230 V ... 8 µF: order No. ***179-340-007***
115 V ... 30 µF: order No. ***179-340-060***

Fig. 5

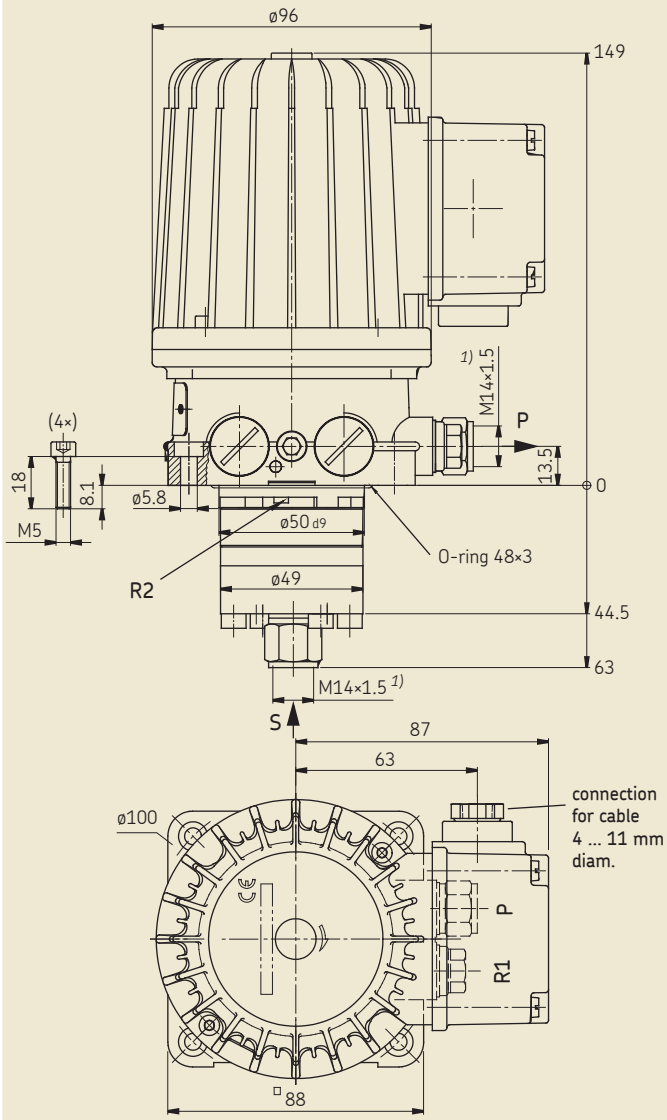

S = inlet (suction port)
P = outlet (pressure port)
R1 (ME5), R2 (MFE5) = oil return from relief and pressure limiting valve

[1]) *Ports tapped for solderless 8 mm diam tube connection.*

Technical data of the shown motor

Motor	Three-phase motor	
Mode of operation	S1, 100%	
Insulation class	F	
Rated frequency [Hz]	50	60
Voltage [V] Y [4])	400	480
Rated current [A]	0.29	0.29
Rated power [kW]	0.075	0.09
Rated speed [rpm]	2700	3200
Rated flow rate [l/min]	0.5	0,.6
Operating pressure [bars]	28	
Operating temperature [°C]	+10 to +40	
Medium	20 to 1000 mm²/s	
Type of enclosure acc. to DIN 50050	IP 54	
Max. suction head [mm]	500	

[4]) *See page 6: "Multivoltage motors"*

ギアポンプユニット

シングルライン集中潤滑システム用

MFE2/5-BW3-N114

MFE2/5-BW6-N114

MFEユニットはシングルラインの集中潤滑システムにおいて間欠的に潤滑油を供給する為に使用するものです。標準の仕様はモーター付ギアポンプ、潤滑油用金属タンク（3, 6, 15, 30L）、潤滑油の下限を検知するフロートスイッチです。

標準仕様以外の特殊タイプについては営業員までお問合せ下さい。

MFE2/5-BW3-N114

仕様

ポンプ：
吐出量.....0.2L/min(MFE2)
.....0.5L/min(MFE5)
吐出圧力.....max.2.7 +0.1-0.2MPa
使用粘度.....MFE2:20～2000mm^2/s
.....MFE5:20～1000mm^2/s

モーター：
電圧.....AC 220/380V
定格周波数.....50/60Hz

タンク容量：
全油量.....約2.7L
有効油量.....約1.7L

フロートスイッチ：
取付位置.....垂直
スイッチ形式.....マグネット作動式
ガス封入開閉型スイッチ
接点.....1C
スイッチ数.....1
電圧.....max.230V
電流.....max.1A
接点容量.....60VA 40W
使用温度範囲.....-10℃～+80℃
保護仕様.....IP65
電線取出口の形式.....G1/2
キャップと共に90°ずつ回転可能
ソケット部端子形式.....棒端子用

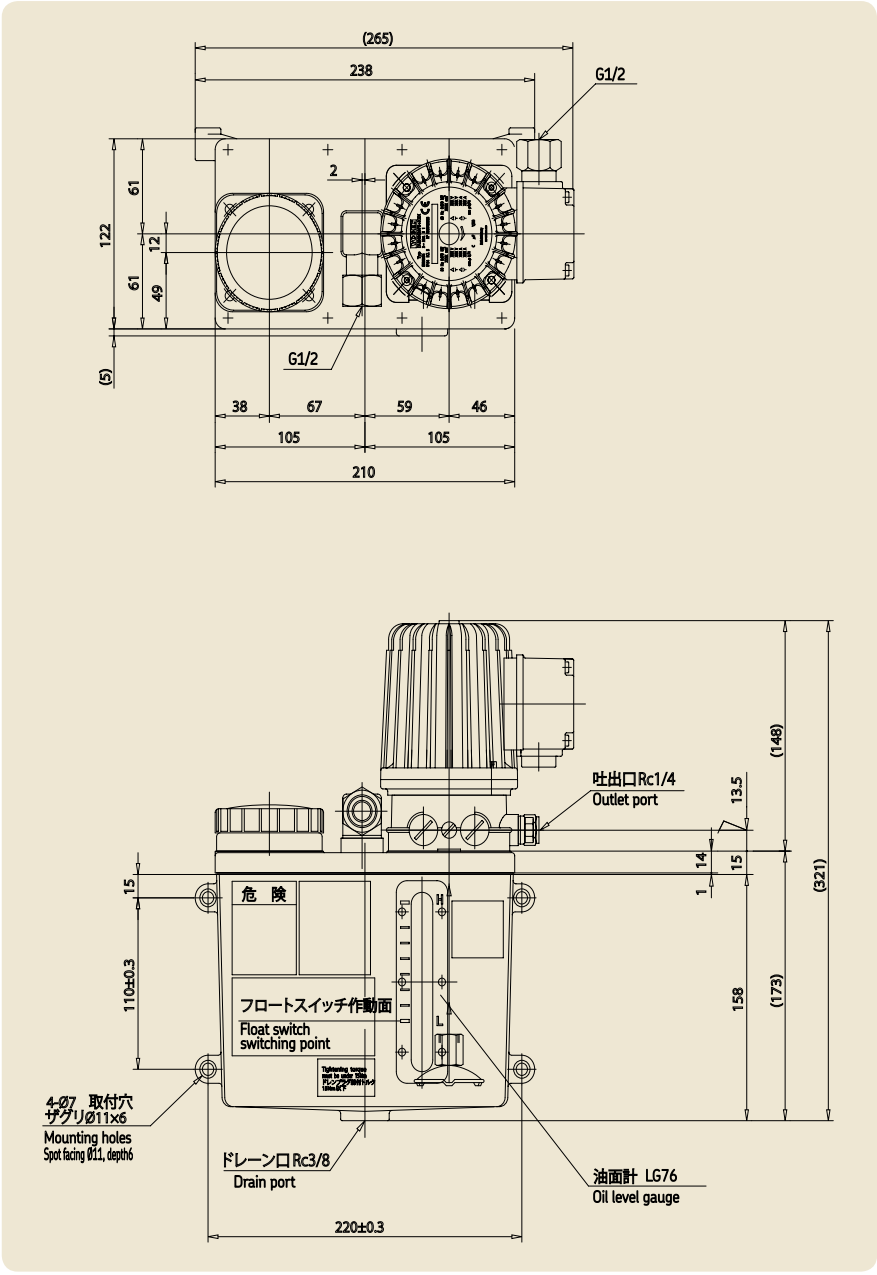

フロートスイッチWS

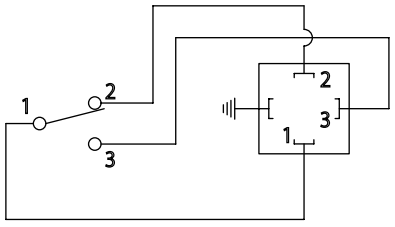

液面がスイッチ作動面に達した時、
接点１と２が開き、接点１と３が閉じる

When the liquid drops to the minimum level, contact 1-2 opens and contact 1-3 closes.

系統図

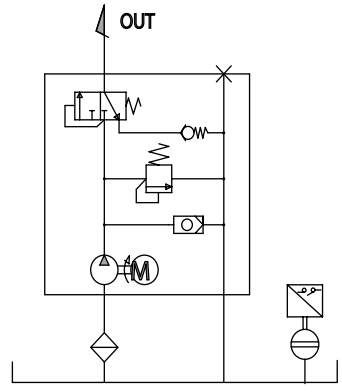

MFE2/5-BW6-N114

仕様

ポンプ：
吐出量.....0.2L/min(MFE2)
.....0.5L/min(MFE5)
吐出圧力.....max.2.7 +0.1-0.2MPa
使用粘度.....MFE2:20～2000mm²/s
.....MFE5:20～1000mm²/s

モーター：
電圧.....AC 220/380V
定格周波数.....50/60Hz

タンク容量：
全油量.....約5L
有効油量.....約3L

フロートスイッチ：
取付位置.....垂直
スイッチ形式.....マグネット作動式
ガス封入開閉型スイッチ
接点.....1C
スイッチ数.....1
電圧.....max.230V
電流.....max.1A
接点容量.....60VA 40W
使用温度範囲.....-10℃～+80℃
保護仕様.....IP65
電線取出口の形式.....G1/2
キャップと共に90°ずつ回転可能
ソケット部端子形式.....棒端子用

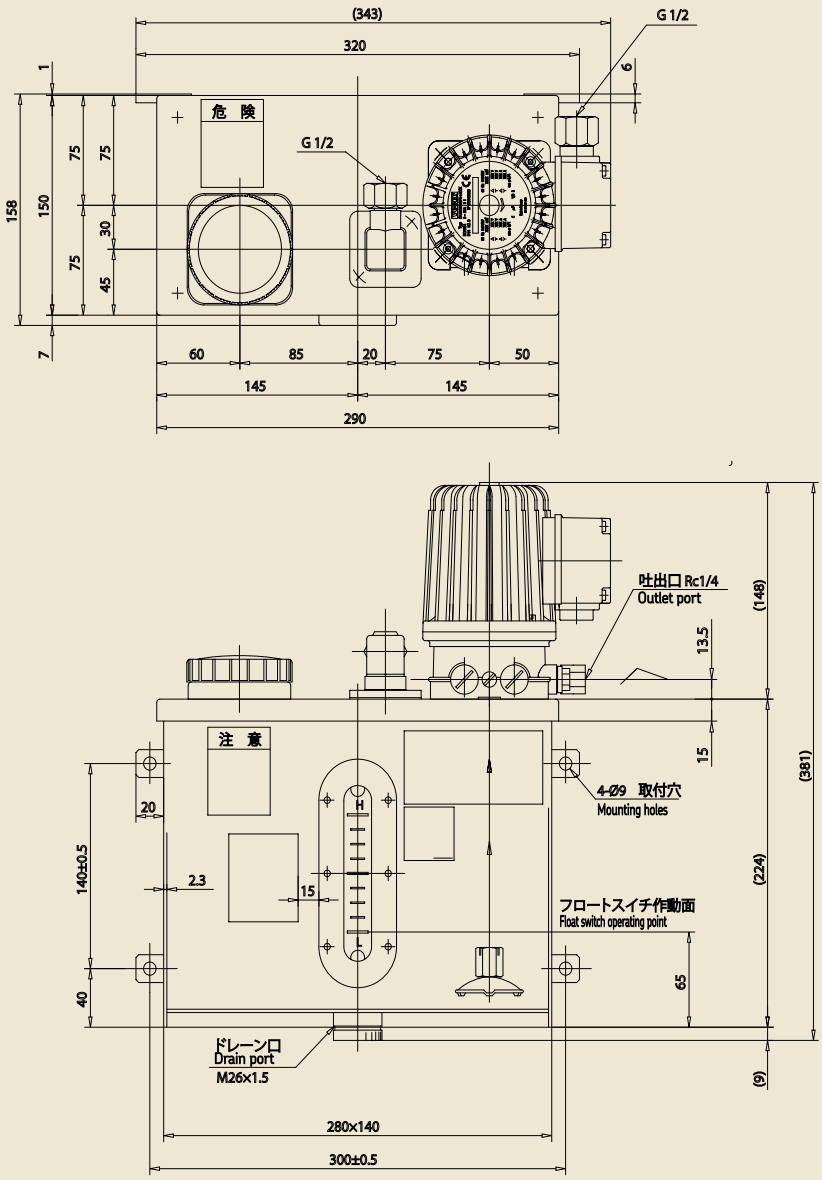

フロートスイッチWS

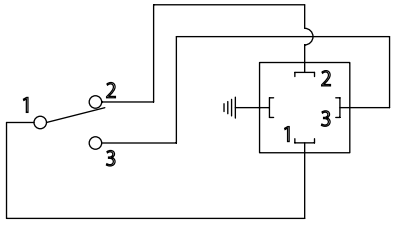

液面がスイッチ作動面に達した時、
接点１と２が開き、接点１と３が閉じる

When the liquid drops to the minimum level, contact 1-2 opens and contact 1-3 closes.

系統図

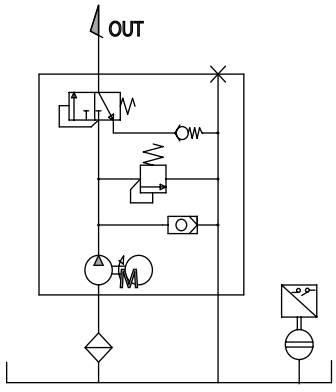

MFE2/5-BW15-N211

仕様

ポンプ：
吐出量.....0.2L/min(MFE2)
.....0.5L/min(MFE5)
吐出圧力.....max.2.7 +0.1-0.2MPa
使用粘度.....MFE2:20～2000mm^2/s
.....MFE5:20～1000mm^2/s

モーター：
電圧.....AC 220/380V
定格周波数.....50/60Hz

タンク容量：
全油量.....約9L
有効油量.....約6L

フロートスイッチ：
取付位置.....垂直
スイッチ形式.....マグネット作動式
ガス封入開閉型スイッチ
接点.....1C
スイッチ数.....1
電圧.....max.230V
電流.....max.1A
接点容量.....60VA 40W
使用温度範囲.....-10℃～+80℃
保護仕様.....IP65
電線取出口の形式.....G1/2
キャップと共に90°ずつ回転可能
ソケット部端子形式.....棒端子用

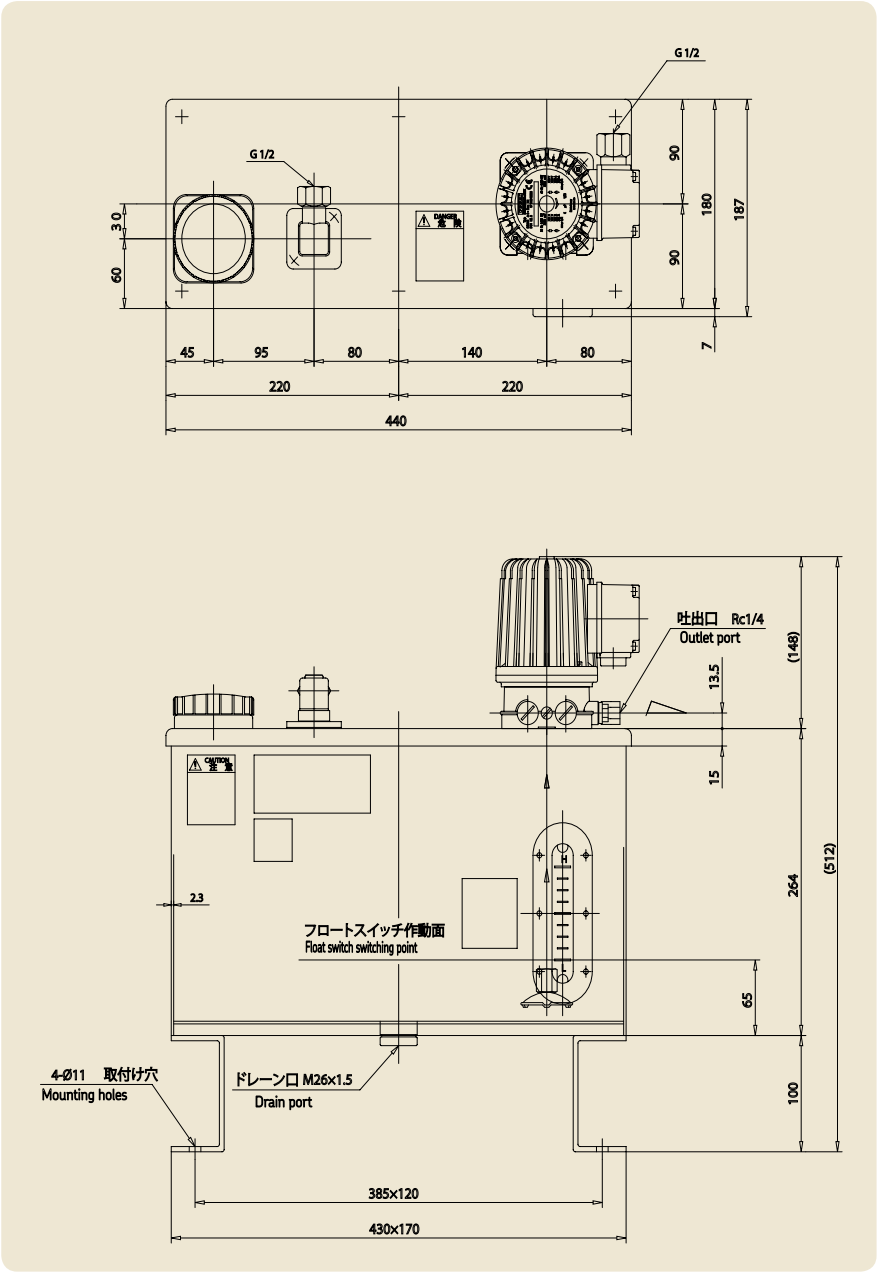

フロートスイッチWS

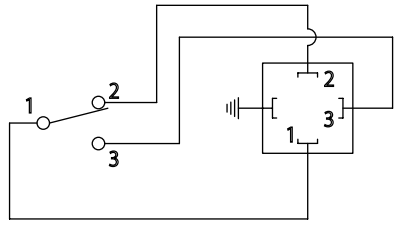

液面がスイッチ作動面に達した時、
接点１と２が開き、接点１と３が閉じる

When the liquid drops to the minimum level, contact 1-2 opens and contact 1-3 closes.

系統図

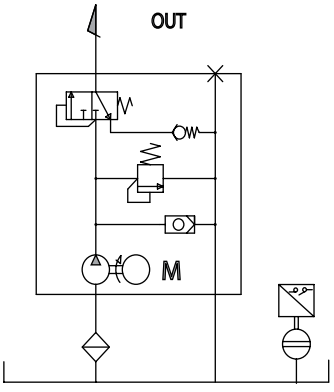

MFE2/5-BW30-N211

仕様

ポンプ：
吐出量.....0.2L/min(MFE2)
.....0.5L/min(MFE5)
吐出圧力.....max.2.7 +0.1-0.2MPa
使用粘度.....MFE2:20～2000mm^2/s
.....MFE5:20～1000mm^2/s

モーター：
電圧.....AC 220/380V
定格周波数.....50/60Hz

タンク容量：
全油量.....約31L
有効油量.....約24L

フロートスイッチ：
取付位置.....垂直
スイッチ形式.....マグネット作動式
ガス封入開閉型スイッチ
接点.....1C
スイッチ数.....1
電圧.....max.230V
電流.....max.1A
接点容量.....60VA 40W
使用温度範囲.....-10℃～+80℃
保護仕様.....IP65
電線取出口の形式.....G1/2
キャップと共に90°ずつ回転可能
ソケット部端子形式.....棒端子用

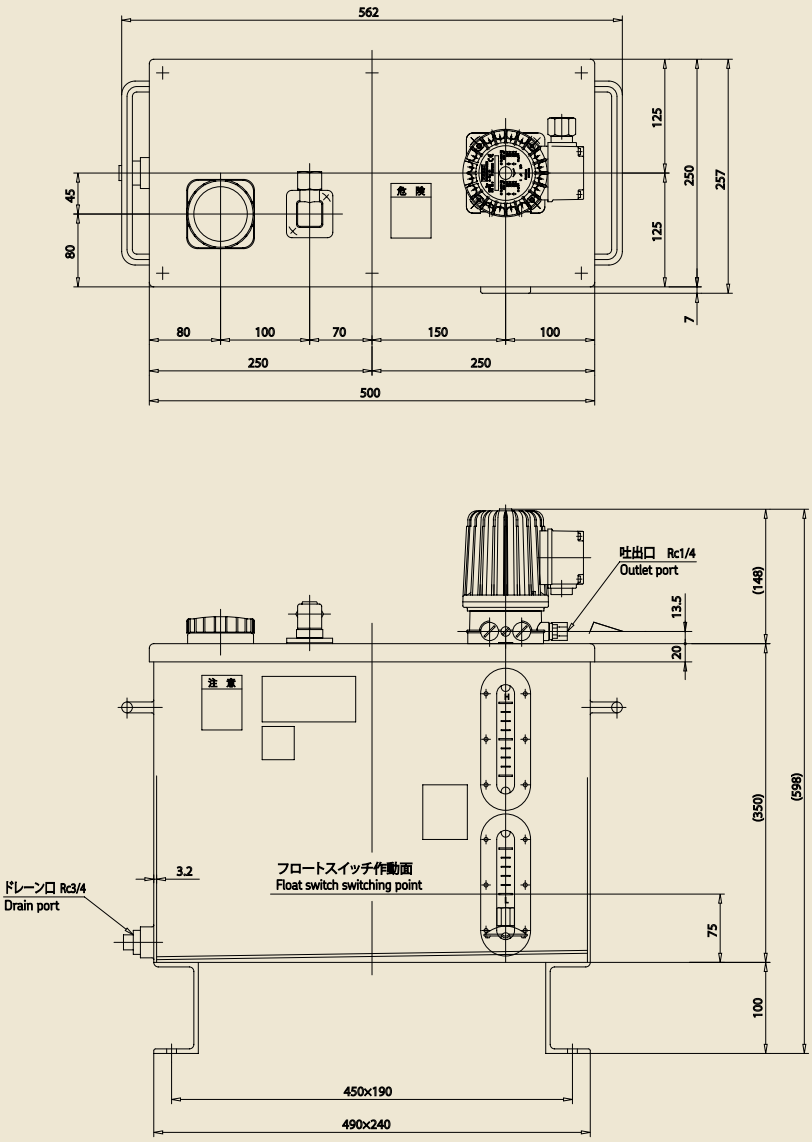

フロートスイッチWS

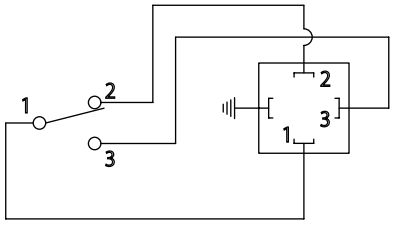

液面がスイッチ作動面に達した時、
接点１と２が開き、接点１と３が閉じる

When the liquid drops to the minimum level, contact 1-2 opens and contact 1-3 closes.

系統図